EFL404

HIGH CAPACITY ELECTRIC COUNTERBALANCED FORKLIFT 4T

4000 kg 3000 mm

The EFL 96V series is designed for heavy-duty material handling applications in manufacturing plants, logistics hubs, construction sites, shipyards and ports. It's ideal for industries such as building materials, metals, woods and large-dismeter pipes. The market-proven 96V Li-ion technology benefits those who want to extend their fleet capability with lower ownership and lower barrier on technical strength.

SPECIFICATION	REF	UNIT	VALUE
Manufacturer			EP
Model designation			EFL404
Battery voltage/nominal capacity		V/Ah	96V/560AH
Rated capacity	Q	kg	4000
Load centre distance	c	mm	500
Service weight		kg	6450
Height, mast lowered	h_1	mm	2250
Lift	h_3	mm	3000
Height, mast extended	h_4	mm	4177/3835
Overall length	l_1	mm	4125
Overall width	b_1/b_2	mm	1495
Length to face of forks	l_2	mm	3055
Fork dimensions	s/e/l	mm	50×150×1070
Turning radius	Wa	mm	2680
Drive			Electric
Operator type			Seated

Copyright 2026 EP Equipment. All rights reserved. | Datasheet last updated 2026-06-16

Features

Family-style design with upgraded details and driving comfort

Minimize upfront investment: budget-friendly and worry-free after service

Market-proven 96V Li-ion battery with opportunity charging and zero maintenance

Hydraulic power brake system for stable performance in all conditions

Load-sensing hydraulics for 5% higher energy efficiency

VDI Chart

	SPECIFICATION	REF	UNIT	VALUE
1.1	Manufacturer			EP
1.2	Model designation			EFL404
1.3	Drive			Electric
1.4	Operator type			Seated
1.5	Rated capacity	Q	kg	4000
1.6	Load centre distance	c	mm	500
1.8	Load distance, centre of drive axle to fork	x	mm	545
1.9	Wheelbase	y	mm	2000
2.1	Service weight		kg	6450
2.2	Axle loading, laden front/rear		kg	9442/1008
2.3	Axle loading, unladen front/rear		kg	3352/3098
3.1	Tyres			Pneumatic
3.2	Tyre size, front		mm	8.25-15-14PR
3.3	Tyre size, rear		mm	7.00-12-12PR
3.5	Wheels, number front/rear (x=drive wheels)			2x/2
3.6	Tread width, front	b_{10}	mm	1176

Copyright 2026 EP Equipment. All rights reserved. | Datasheet last updated 2026-06-16

	SPECIFICATION	REF	UNIT	VALUE
3.7	Tread width, rear	b_{11}	mm	1190
4.1	Tilt of mast/fork carriage forward/backward	α/β	°	6/12
4.2	Height, mast lowered	h_1	mm	2250
4.3	Free lift	h_2	mm	150
4.4	Lift	h_3	mm	3000
4.5	Height, mast extended	h_4	mm	4177/3835
4.7	Height of overhead guard (cabin)	h6	mm	2400
4.8	Seat height relating to SIP/stand height	h7	mm	1290
4.12	Coupling height	h10	mm	640
4.19	Overall length	l_1	mm	4125
4.20	Length to face of forks	l_2	mm	3055
4.21	Overall width	b_1/b_2	mm	1495
4.22	Fork dimensions	s/e/l	mm	50×150×1070
4.23	Fork carriage ISO 2328, class/type A, B			3A
4.24	Fork carriage width		mm	1380 (1424)
4.31	Ground clearance, laden, below mast		mm	150
4.32	Ground clearance, centre of wheelbase	m_2	mm	180
4.34.1	Aisle width for pallets 1000×1200 crossways	Ast	mm	4495
4.34.2	Aisle width for pallets 800 × 1200 lengthways	Ast	mm	4625
4.35	Turning radius	Wa	mm	2680
5.1	Travel speed, laden/unladen		km/h	16/17
5.2	Lift speed, laden/unladen		m/s	0.44/0.46
5.3	Lowering speed, laden/unladen		m/s	0.42/0.35
5.5	Drawbar pull, laden/unladen			/
5.6	Max. drawbar pull, laden/unladen		N	/
5.8	Max. gradeability, laden/unladen		%	17/25
5.10	Service brake			Mechanical/Hydraulic
5.11	Parking brake			Mechanical
6.1	Drive motor rating S2 60 min		kW	37
6.2	Lift motor rating at S3 15%		kW	30
6.4	Battery voltage/nominal capacity		V/Ah	96V/560AH
6.5	Battery weight		kg	510
8.1	Type of drive unit			PMSM
10.5	Steering design			Hydraulic

Copyright 2026 EP Equipment. All rights reserved. | Datasheet last updated 2026-06-16

	SPECIFICATION	REF	UNIT	VALUE
10.7	Sound pressure level at the driver's seat		dB(A)	/

Subject to modification of specifications and designs without prior notice as part of continuous product improvement. Images and technical data shown may include optional features and are provided for reference only. All dimensions are subject to standard manufacturing tolerances.

Copyright 2026 EP Equipment. All rights reserved. | Datasheet last updated 2026-06-16

VDI Drawing

EFL404/EFL454/EFL504/EFL504-6/EFL554-6

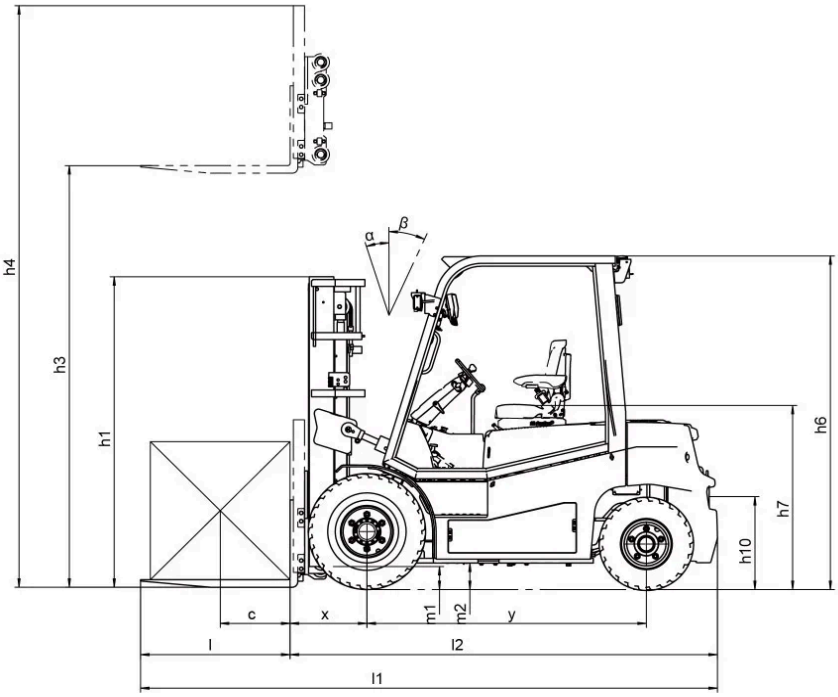

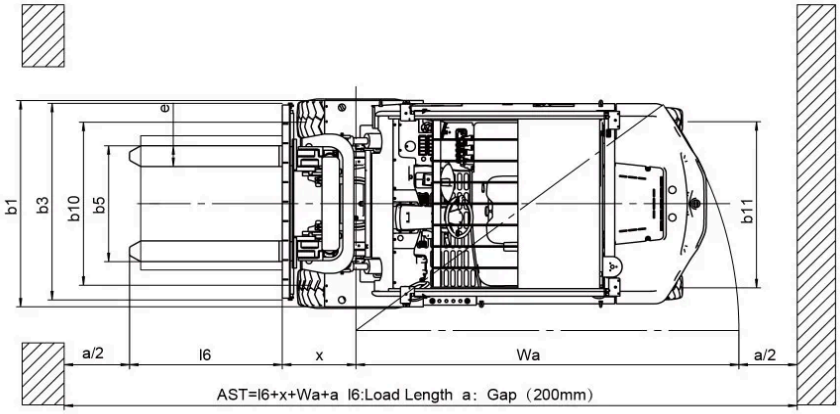

Copyright 2026 EP Equipment. All rights reserved. | Datasheet last updated 2026-06-16

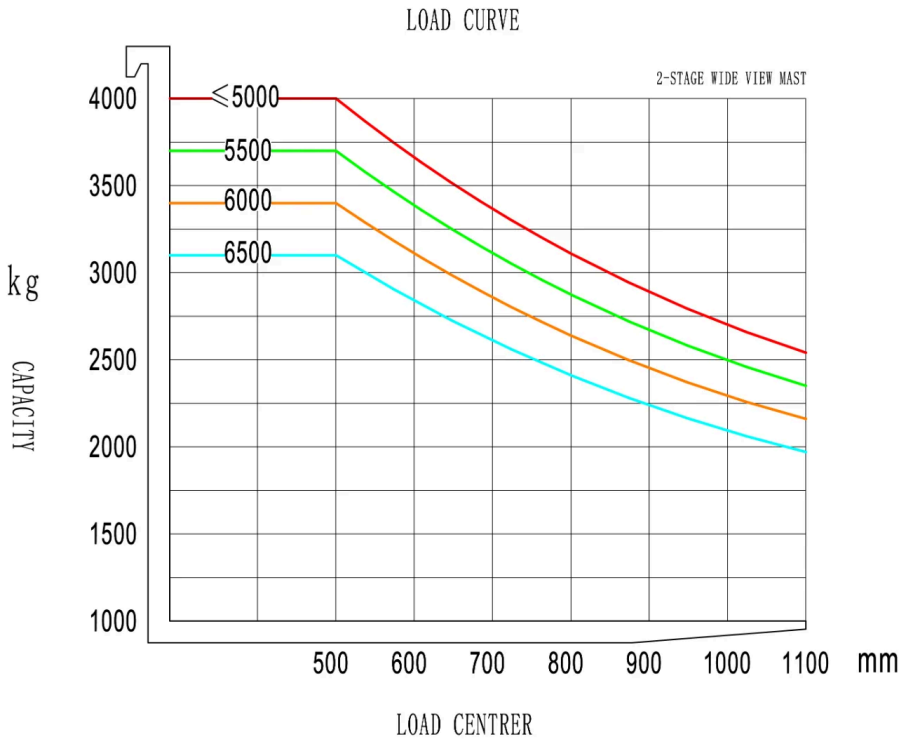

Mast Options

MAST TYPE	LIFT HEIGHT (H3, MM)	MAST LOWERED HEIGHT (H1, MM)	MAST EXTENDED HEIGHT, NO BACKREST (H4, MM)	MAST EXTENDED HEIGHT, WITH BACKREST (H4, MM)	FREE LIFT HEIGHT, NO BACKREST (H2, MM)	FREE LIFT HEIGHT, WITH BACKREST (H2, MM)	FORWARD TILT (A, DEG)	BACKWARD TILT (B, MM)	LOAD DISTANCE (X, MM)
2-Standard Mast	3000	2250	3835	4155	150	150	6	12	500
2-Standard Mast	3500	2500	4335	4655	150	150	6	12	500
2-Standard Mast	3600	2550	4435	4755	150	150	6	12	500
2-Standard Mast	4000	2750	4835	5155	150	150	6	12	500
2-Standard Mast	4500	3050	5335	5655	150	150	6	6	500
2-Standard Mast	5000	3300	5835	6155	150	150	6	6	500
2-Standard Mast	5500	3600	6335	6655	150	150	3	6	500
2-Standard Mast	6000	3850	6835	7155	150	150	3	6	500
2-Standard Mast	6500	4150	7335	7655	150	150	3	6	500
2-Free Mast	3000	2250	3835	4155	1435	1115	6	12	500
2-Free Mast	3500	2500	4335	4655	1685	1365	6	12	500

Copyright 2026 EP Equipment. All rights reserved. | Datasheet last updated 2026-06-16

MAST TYPE	LIFT HEIGHT (H3, MM)	MAST LOWERED HEIGHT (H1, MM)	MAST EXTENDED HEIGHT, NO BACKREST (H4, MM)	MAST EXTENDED HEIGHT, WITH BACKREST (H4, MM)	FREE LIFT HEIGHT, NO BACKREST (H2, MM)	FREE LIFT HEIGHT, WITH BACKREST (H2, MM)	FORWARD TILT (A, DEG)	BACKWARD TILT (B, MM)	LOAD DISTANCE (X, MM)
2-Free Mast	4000	2750	4835	5155	1935	1615	6	12	500
2-Free Mast	4500	3050	5335	5655	2235	1915	6	6	500
2-Free Mast	5000	3300	5835	6155	2485	2165	6	6	500
2-Free Mast	5500	3600	6335	6655	2785	2465	3	6	500
2-Free Mast	6000	3850	6835	7155	3035	2715	3	6	500
2-Free Mast	6500	4150	7340	7655	3305	3015	3	6	500
3-Free Mast	4000	2080	4740	5155	1360	945	6	12	500
3-Free Mast	4300	2180	5040	5455	1460	1045	6	12	500
3-Free Mast	4500	2247	5242	5657	1527	1112	6	6	500
3-Free Mast	4700	2313	5440	5855	1593	1178	6	6	500
3-Free Mast	4800	2347	5540	5955	1627	1212	6	6	500
3-Free Mast	5000	2413	5740	6155	1693	1278	6	6	500
3-Free Mast	5500	2580	6240	6655	1860	1445	3	6	500
3-Free Mast	6000	2797	6771	7155	2046	1662	3	6	500
3-Free Mast	6500	2963	7269	7655	2214	1828	3	6	500
3-Free Mast	7000	3130	7770	8155	2380	1995	3	6	500

Options

ITEM	OPTIONS (optional items marked in yellow)
Fork dimension	150*50*1070 | Can be customized
Fork carriage width option	1380mm | Yes and can be customized
Backrest height	1185mm | Yes and can be customized
Front wheel material	Pneumatic | Normal solid | Non-marking solid
Rear wheel material	Pneumatic | Normal solid | Non-marking solid
Battery capacity	96V560AH
Charger	96V-100A | 96V-150A | 96V-200A

Copyright 2026 EP Equipment. All rights reserved. | Datasheet last updated 2026-06-16

ITEM	OPTIONS (optional items marked in yellow)
Seat type	KL01 with armrest | GRAMMER-MSG65
Attachments	No | External sideshifter | Fork positioner with sideshift | forkpositioner with pin type forks
Traction pin	Yes and not customized
Warning lamp	LED | rotating warning light | rotating warning light with buzzer
Blue lamp	No | Rear | Front and rear
Area warning lamp	No | Both sides | Both sides and rear | Rear
Buzzer	Buzzer | English
OPS system	Yes and not customized
USB interface	USB TYPE A/C
Telematics	Yes and not customized
Cabin	No | Basic half cabin① | Upgrade half cabin② | Full cabin③ | Upgrade full cabin④
Overhead guard	standard
Turn speed control	No | Yes and not customized
Heating system during lithium battery charging	Yes and not customized
Operator identification device	No | Card reader
Lifting electronic limit	No | Yes and not customized
Hydraulic system operating mode	Fingertip | Mechanical lever
Rear armrest horn	Yes and not customized
Adjustable overspeed alarm	No | Yes and not customized
Cigarette lighter socket	No | Yes and not customized
Fog light	No | Yes and not customized
Mast working light	No | LED*2
Reversing radar	No | reverse radar | reversing camera | reversing radar + backup camera
Travel deceleration function after mast lifting	No | Yes and not customized

Copyright 2026 EP Equipment. All rights reserved. | Datasheet last updated 2026-06-16