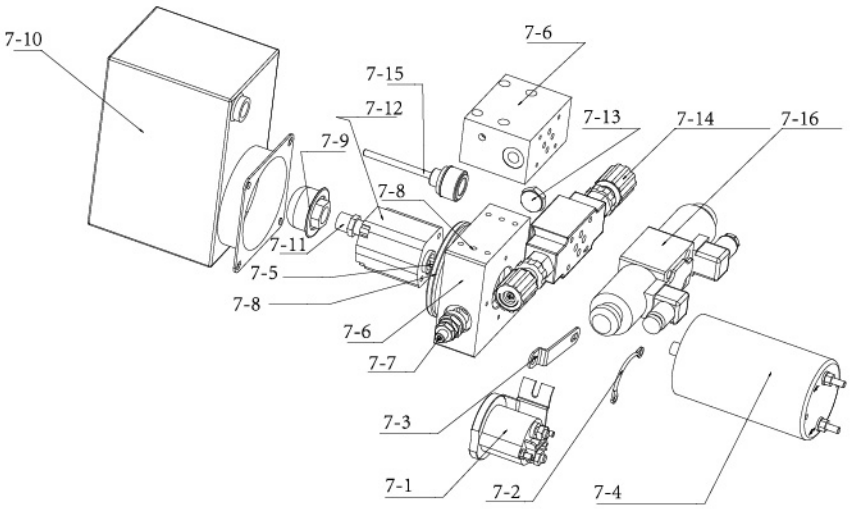

Note:
Power Unit No. 13050-15A

Relevant technical parameters
1. Motor: 12V 0.8kw
2. Pump displacement: 1.25cc/r
3. Oil tank: 2L (iron)
4. System pressure: 18Mpa
5. Installation mode: vertical

Fig.7 Power unit assembly

No.	Part name	Qty	No.	Part name	Qty
7-1	Starting switch	1	7-9	Filter screen	1
7-2	Connecting line	1	7-10	Tank	1
7-3	Copper connecting piece	1	7-11	Joint	1
7-4	Electric machinery	1	7-12	Gear pump	1
7-5	Coupling	1	7-13	Check valve	1
7-6	Valve block	1	7-14	Flow control valve	1
7-7	Relief valve	1	7-15	Oil dipstick	1
7-8	Seal ring	1	7-16	Solenoid valve	1

CE

SEMI ELECTRIC SELF-LIFT STACKER

OPERATION INSTRUCTIONS



Carefully read the instructions and obey all kinds of warning labels before operation.
Please confirm that the vehicle is safe without damage.

2023.12

SAFETY INSTRUCTIONS

To ensure safe operation, please observe the following general safety precautions.

WARNING

Non professional personnel are strictly prohibited to set up, debug, test and maintain.

Warning:
If this operation manual is not followed, the quality assurance of the company will automatically fail, which also applies to the illegal export of products by customers or third parties without the permission of the manufacturer. Without the permission of the customer service department of the company, if the customer and the third party execute the nonstandard operation of the forklift without authorization, the company will not bear any responsibility for the loss.

Note: The manufacturer reserves the right to change the design and specification of the product without notice due to the continuous improvement of the product.

Please keep it properly Can be queried when needed

CATALOG

1.Product introduction and safety rules..... 1

2.Technical parameters and characteristics..... 3

3.Vehicle structure..... 4

4.Operating instructions..... 5

5.After-sale service..... 13

6.Product spare parts..... 14

1. Product introduction and safety rules

Welcome to use this series of self elevating vehicle. For your safety and correct operation, please read this operation manual before use, clearly understand and master the safe operation of the vehicle, and strictly abide by the safe operation rules.

1.1. Most of the products are made of recyclable steel. The wastes generated in the process of use, maintenance, cleaning and disassembly must be recycled and treated in accordance with the local regulations without pollution. The recycling of these wastes must be completed by professionals in the designated areas. If the waste treatment of oil cylinders, batteries and electronic equipment is improper Can cause harm to environment and human health.

1.2. This vehicle is a vertical lifting and stacking equipment, which can lift and climb by itself, and is convenient for the logistics handling equipment carried by specific trucks.

1.3 The operator must be clear about his rights and obligations, have received operation training, be familiar with the contents of relevant operation instructions, and abide by the safety use regulations.

1.4 The user of the equipment must ensure that it is only used for the specified purpose, and timely eliminate all risks that may endanger the life and health of the user or others.

1.5 The operator shall be responsible for the equipment during the working period, and he must prevent unauthorized personnel from operating the equipment.

1.6 Damage and defect of the equipment; if damage or other defects are found on the equipment, it is necessary to stop using immediately and report the situation to the competent personnel in a timely and accurate manner. When it is out of service and its operation performance is not perfect, such as wheel wear or brake failure, it shall not be used without proper maintenance.

1.7 Inspection and maintenance: it must be carried out in accordance with the corresponding inspection and maintenance regulations in the manual. Parts, especially safety devices, on the equipment shall not be changed without permission. In order to ensure the safety and reliability of equipment operation, only spare parts of the manufacturer must be used. The replaced parts, such as oil and fuel, must be handled according to the corresponding environmental protection rules.

1.8 Dangerous area: the dangerous area generally refers to the following areas: the danger of equipment load lifting device (such as forks or accessories) to personnel during operation or lifting action, or the area where the load is being transported, usually this area extends to the area where the load is lowered or vehicle accessories are lowered: it is strictly prohibited to carry people on the forks; it is strictly prohibited to stand at the bottom of the forks; other personnel shall Stand outside the operation radius; the truck shall not stop on the slope road, but must stop on the hard and flat cement road to prevent the equipment from slipping during lifting; when the equipment is lifting, the operator must stand on both sides of the equipment to operate: it shall not be used in the areas with inflammable and explosive hazards, or areas prone to corrosion, rust or dust Use.

1.9 Equipment movement: in addition to lifting the goods, keep the fork below 300 mm in the process of equipment movement.

1.10 Requirements for handling materials: This equipment is only used for pallet handling. All the materials to be handled must be stable, orderly and evenly stacked on the pallet, and shall not exceed the pallet. The size of the pallet is less than 800 * 1150mm. It is strictly prohibited to directly use the fork to contact the materials and carry out the handling operation. Overload and partial load are strictly prohibited.

1.11 Ground load: please pay attention to check whether the weight of equipment and load or the pressure of wheels on the ground exceeds the bearing capacity of the load during operation.

1.12 When charging the battery, it must be well ventilated. No fireworks or inflammable and explosive substances are allowed nearby.

1.13 Protective shoes: during the operation, the protective shoes that meet the standards must be worn.

1.14 Scope of use: This equipment is suitable for use on flat, dry, clean and level solid ground or truck. The ambient temperature is 5 °C - 40 °C, and the temperature is lower than 5 °C. Special devices must be used. It is strictly prohibited to use it outdoors in rainy days.

1.15 Balance area: when the equipment is lifted and lowered by itself, the rear edge line of the truck must be in the balance area on the fork.

1.16. In this operation manual, the equipment user refers to any natural or legal person who directly uses or appoints others to use the equipment. In special circumstances such as leasing, leasing, etc., the equipment user represents the party who undertakes the specified operation obligations according to the contract terms concluded between the equipment owner and the user.

1.17 The user of the equipment must ensure that the equipment is used for the specified purpose and eliminate all hazards that may endanger the life and health of the operator or others. In addition, the user of the equipment must strictly abide by the accident prevention regulations, other safety technical regulations and the operation, maintenance and repair rules of the equipment. The user of the equipment must ensure that all operators carefully read and Fully understand the contents of this operation manual.

1.18. The operation and use of the equipment must be strictly followed. The relevant laws and regulations of the user's country will not be affected. Using the equipment for any other purpose is an operation not in conformity with the regulations, which may cause casualties and equipment or other property losses.

1.19 Schematic diagram of equipment nameplate

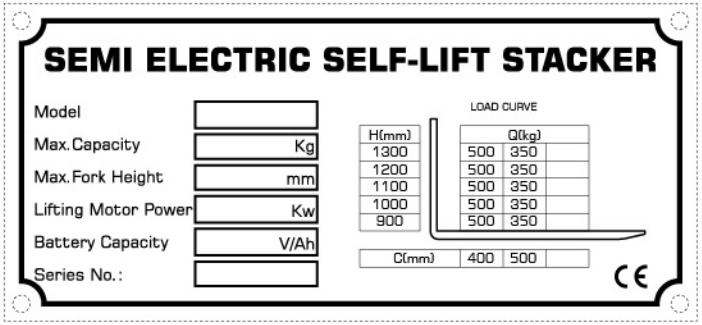

2．Technical parameters and characteristics

The Semi Electric Self-lift Stacker is designed in accordance with the national standard for safety code of motor industrial vehicles specified in JB / t3341-2005 palletizing car and gb10827. It is located in a small, nimble, energy-saving and reliable vehicle type with convenient operation, which is used for loading and unloading vehicles together with goods.

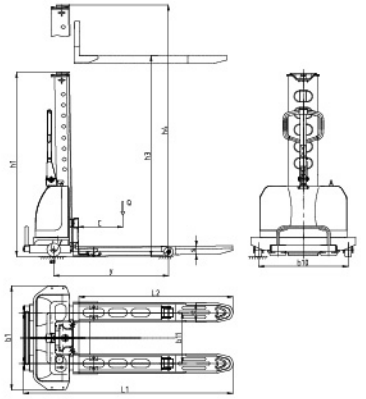

2.1 Technical parameters

Base	Model		SDYG-Z 0509/0510/0511/0513/0515	SDYG-Z 1011/1013
	Capacity	Q(Kg)	500	1000
	Load center	C(mm)	400	400
	Type of lifting		Electric	Electric
	Operating type		Walkie	Walkie
Wheel	Material		Nylon/PU	Nylon/PU
	Wheel base	y(mm)	860	860
	Front wheel base	b_{11}(mm)	380	380
	Back wheel base	b_{10}(mm)	670	670
	Quantity of wheel(Steering/Bearing/Balance)		2/2/6	2/2/6
Dimensions	Bearing wheel size	mm	Φ70×60	Φ70×60
	Steering wheel size	mm	Φ100×50	Φ100×50
	Balance wheel size	mm	Φ40×26	Φ40×26
	Training wheel size	mm	Φ30×26	Φ30×26
	Min.fork height	mm	90	90
	Max.fork height	h_3(mm)	900/1000/1100/1300/1500	1100/1300
	Fork outside width	mm	535	535
	Fork inside width	mm	225	225
	Fork length	l(mm)	1150	1200
	Single fork size	e*s(mm)	155×60	155×60
	Overall length	L_1(mm)	1600	1610
	Overall width	b_1(mm)	790	810
	Overall height	h_1(mm)	1200/1300/1400/1600/1800	1400/1600
	Whole height(after tape file shelf)	h_4(mm)	2100/2300/2500/2900/3300	2500/2900
	Length of vertical surface to fork	l_7(mm)	1150	1150
	Min.turning radius	Wa(mm)	1120	1120
Performance	Lifting speed	mm/s	80/110(laden/unladen)	85/85(laden/unladen)
	Lowering speed	mm/s	80/80(laden/unladen)	88/85(laden/unladen)
Electrol	Lift motor	V/Kw	12/0.8	12/0.8
	Battery capacity	V/Ah	12/33	12/50(lithium battery)
Weight	Battery weight	Kg	10	12
	Net weight	Kg	175/186/197/219/245	245/265

** The company reserves the right to change product design and specifications without prior notice.*

2.2 Performance and characteristics

2.2.1. Adopt double oil way control system design and double linkage oil cylinder assembly to make the piston rod of oil cylinder move in two directions.

2.2.2. The inner gantry is an independent gate post, which is connected with the fork bolt, and directly moves up and down from the cylinder piston rod to lift and lower the goods, without the need to pass through the roller plate; the outer gate post is a supporting post, which is welded with the frame platform, so as to reduce the total height and weight of the frame and achieve the purpose of lightweight.

2.2.3. The gate seat is a movable gate seat, which has a relative motion relationship with the lifting of the rack or fork. When the fork (and cargo) is lifted to the platform height as the support, the gate seat is pulled out, and the frame can be lifted to the platform successively along with the oil cylinder to recover the circulation.

3、Vehicle structure

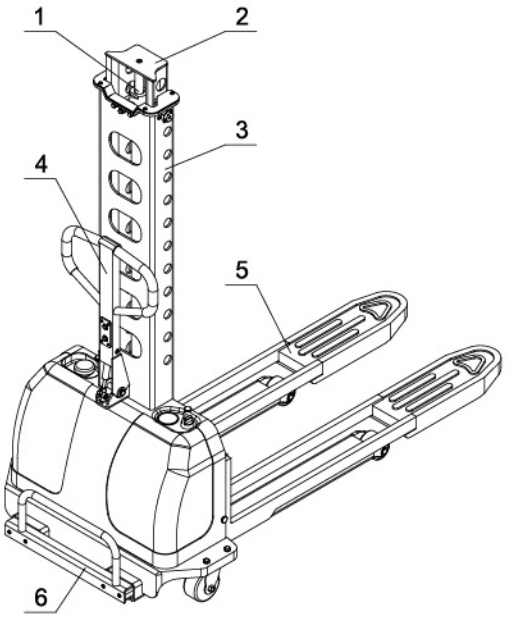

1、Cylinder assembly
2、Inner door post assembly
3、Frame assembly
4、Handle assembly
5、Fork weldment
6、Movable door seat assembly

4、Vehicle use

4.1、Environmental Science

4.1.1 The working environment temperature of the vehicle is 5 ℃ - 40 ℃; the working pavement is required to be flat concrete or asphalt pavement.

4.1.2 The flat surface in the transport vehicle shall be flat and hard; the distance between the plane of the self door column and the edge of the carriage shall be less than 80mm, and the space size in the carriage shall not be less than 1700mm (height) x 1700mm (length)

4.1.3 The vehicle must be checked and prepared before daily use.

4.2、Operation and use

4.2.1 Starting the vehicle

----Before operating or lifting heavy objects, the operator must make sure that there is no one in the dangerous area of the vehicle --- insert the key in the power switch, press down and rotate it 90 ° to the right to turn on the power

----The meter shows the current power

4.2.2 Operation method

4.2.2.1 Operation requirements for loading and unloading goods and frame lifting

1.1) Before lifting the goods, it is necessary to check whether the weight of the goods exceeds the load capacity of the vehicle and whether the lifting height exceeds the lifting height of the vehicle.

1.2) The forks of the vehicle extend into the space under the tray, try to make the object lean to the load center, then press the upper button (as shown in Figure 1) to slightly lift the object, and release the button to pull the vehicle.

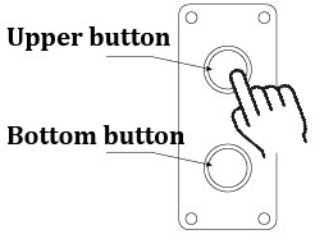



Fig.1

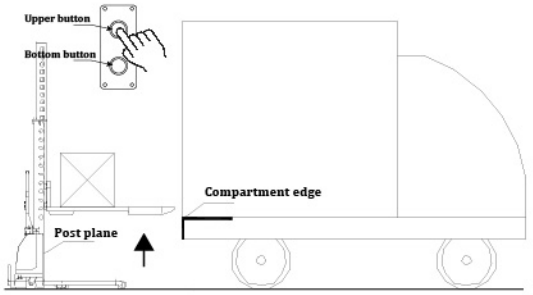

1.3) loading of goods;
Go to the side of the vehicle, the head of the fork is away from the vehicle
Distance ≥ 10cm, press the button to lift the goods.





Fig.2

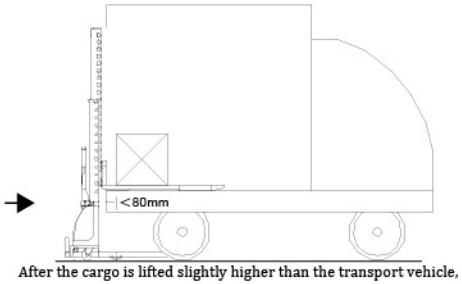

After the cargo is lifted slightly higher than the transport vehicle, push it into the transport vehicle (platform)

1.4) Entering the carriage;
After lifting the goods to a little higher than the vehicle platform, release the upper button, push the forklift steadily and slowly, push the goods into the car, make the forklift door post stick to the car edge (the interval is less than 80mm), and avoid the accessory parts at the car edge, so as to prevent the frame from being touched when lifting.



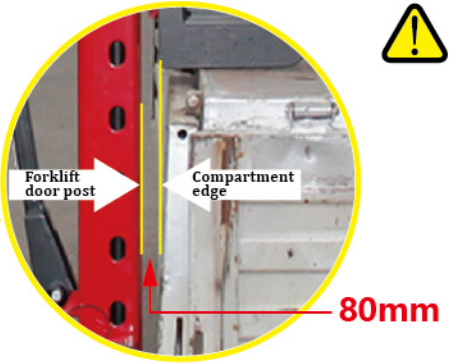

Fig.3

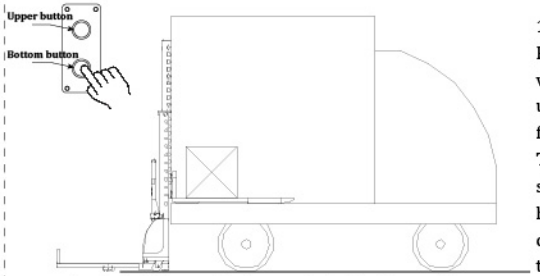

1.5) pull out the door seat;
Press the button, lower the fork onto the vehicle platform, and slightly lift the frame until the door base is more than 5cm away from the ground,
Then release the lower button; stand on one side of the car, hold the frame firmly with one hand, grasp the handrail of the door seat with one hand and pull out the door seat backward to the stop.

Pull out the movable door seat when the door post is close to the transport vehicle

Fig.4





Lowering the fork onto the platform



Pull out the movable door seat



Slightly lift the rack to 5cm above the ground



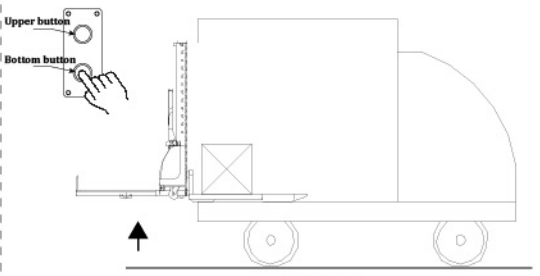

1.6) lifting frame and gate seat;
Hold the frame firmly with one hand, and press the button to lift the frame and the door seat.

Lifting frame



Fig.5

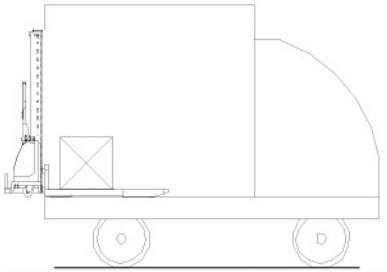

1.7) the door seat guide wheel enters the car;
Lift the frame to the top dead center, release the button, push the door seat, and let the guide wheel under the door seat enter the carriage platform.

Push the movable door seat so that the guide wheel of the door seat falls into the car





Fig.6

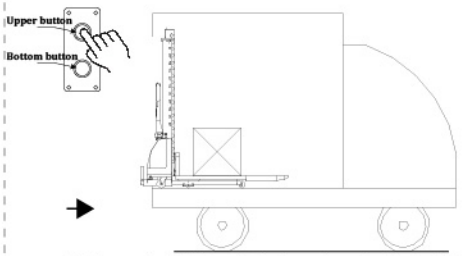

1.8) the frame enters the carriage;
Press the upper button to slightly lift the goods, push the frame to make the universal wheel enter the compartment,

Lift the goods slightly, push the frame to make the gimbal wheel of the frame fall into the carriage





Fig.7



1.9) vehicle parking;
Press the button and lower the fork onto the carriage platform.

Parking



Fig.8

4.2.2.2、operation of vehicle exiting the compartment

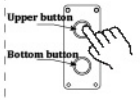

2.1) vehicle first vacancy;
Press the upper button to slightly lift the fork and move the carriage edge.

Lift the fork slightly and move outward from the middle of the transport vehicle to the edge





Fig.9

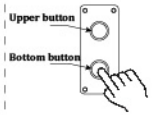

2.2) vehicle exit;
Slowly move the vehicle outwards so that the whole frame is exposed from the vehicle transport platform, and then press the button to lower the fork onto the platform.

Lower the fork onto the platform, and then slowly move the rack outward to expose the edge of the carriage



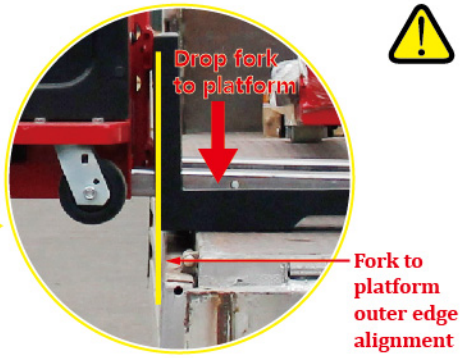

Fig.10

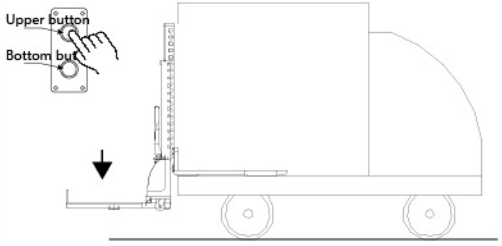

Pull out the door seat and lower the rack

2.3) the frame falls;
Hold the frame by hand and pull out the door seat backward, so that the front wheel of the door seat reaches the rear dead center, so that the whole door seat is exposed on the outside of the carriage platform, and then press the up button to lower the frame.





Fig.11 Pull out the movable door seat

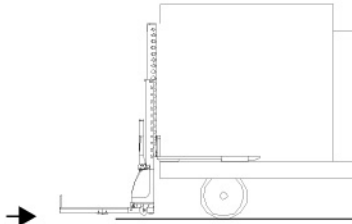

When the frame is lowered to a slightly higher level, push the gate seat

2.4) push the door seat back
When the rack is lowered more than 5cm from the ground, release the button and push the door seat.



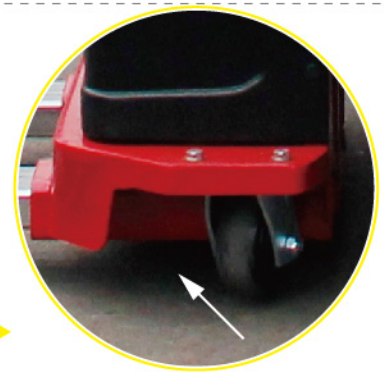

Fig.12 Slightly lift the rack to 5cm above the ground

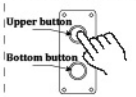

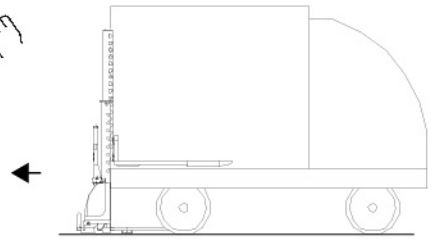

Lower to the ground, raise the fork slightly and drive away from the transport vehicle

2.5) leave the car
Press the upper button, lower the frame and door base to the ground, slightly raise the fork, detach the carriage platform, and move the forklift away from the transport vehicle.





Fig.13

4.3 Use tips

4.3.1. When the movable door seat moves relative to the fork, there must be a component that supports and positions the ground or the carriage before it can move.

4.3.2 during the operation of the self lifting car at the edge of the carriage, there is a balance between the front and rear parts, which must be operated slowly. At the same time, the space at the edge of the carriage should not be too large. Push it inward as much as possible. The balance weight at the front of the fork is set for this purpose.

4.3.3 when the auxiliary parts at the edge of the carriage, such as hinge pin, hook, baffle, etc., are too protruding, they will hinder the use of the vehicle and should be avoided as much as possible.

4.3.4 the guide wheel(see the figure right) under the movable door seat is designed to smoothly push the self car to move into the carriage. Pay attention to maintenance and adjustment during use.

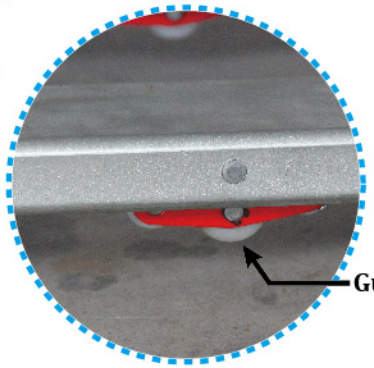

Guide wheel

4.4 Maintenance

4.4.1. The parts on the vehicle, especially the safety devices, shall not be modified without permission; the efficiency, service life and safety of the forklift depend on the daily maintenance.

4.4.2. Routine maintenance form

Item	Maintenance content	Interval time		
		weekly	1 month	3 months
Rack,Fork, Movable door seat of inner door post, Roller	Check whether all components are installed firmly, whether they are loose, and whether the welding of load-bearing components is defective, damaged or cracked		▲	▲
	Check the wear, damage and lubrication of supports and moving parts		▲	▲
Wheel	Remove the sundries on the wheel, check the running condition of the bearing and lubricate it	▲	▲	▲
	Check whether the connection and fixation are reliable	▲	▲	▲
Electric machinery	Clean the foreign matters on the motor housing and check whether the carbon brush is worn			▲
	Clean or replace the bearing, check whether the wiring is correct, firm and reliable			▲
	Check the motor relay			▲
Battery	Check the voltage and insulation resistance of electrical components		▲	▲
	Check whether the terminal and connecting wire are loose		▲	▲
Oil cylinder, hydraulic components	Check the seal for wear and the joint for oil leakage		▲	▲
	Inspection performance		▲	▲
Other	Harness damage, loose fixation, loose connection, etc		▲	▲
	Check instruments, electrical appliances, buttons, microswitches, etc		▲	▲

5. Product delivery and after-sales service

5.1 Products factory

(1) Product delivery inspection contents: overload test, deformation strength test, lifting and stacking operation and operation function are good; hydraulic system works reliably, normal lubrication point is filled with oil, fasteners are firm, rolling clearance is appropriate, appearance is smooth and clean and qualified, etc.

(2) Only when the inspection and test of the vehicle meet the requirements can the certificate be issued for delivery.

(3) Attached accessories: 1 charger (model: 12V6A), 1 operation manual, wearing parts and sealing accessories shall be provided separately according to the customer's requirements.

5.2 After-sale service

(1) Follow the key points stated in the operation manual. The product quality warranty period is one year from the date of purchase or the accumulated working time is 1200 hours.

(2) Warranty period of specific parts:

Frame, fork, hydraulic cylinder 12 months

electrical control system, motor, pump 12 months battery, charger 6 months

wheel and other vulnerable parts are not covered by the warranty.

(3) For after-sales service of products, please contact the local agent, dealer or after-sales service department of the company immediately.

6、Product spare parts

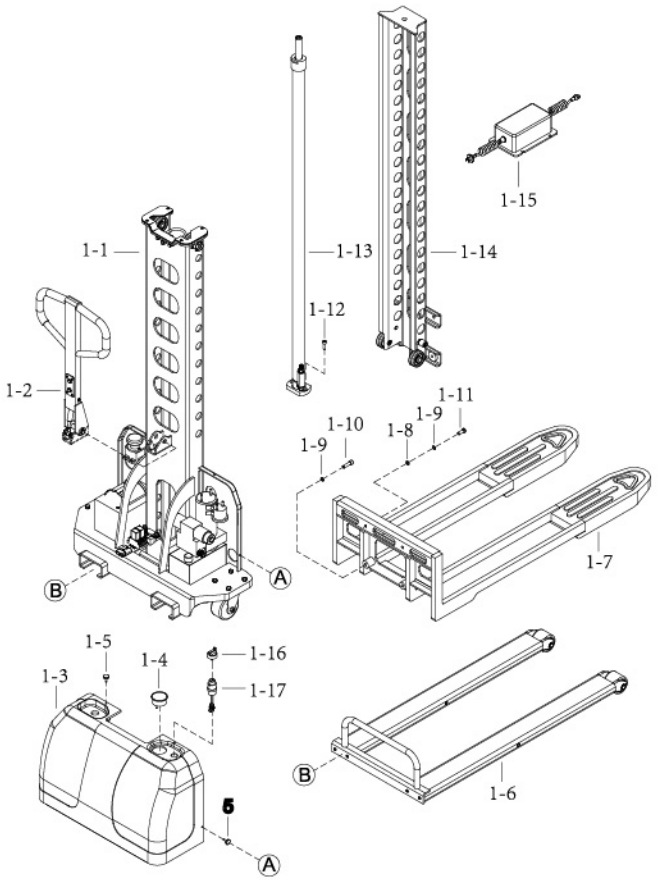

Note: A and B in the figure are the corresponding installation positions

Fig.1

No.	Part name	Qty	Remarks	No.	Part name	Qty	Remarks
1-1	Frame assembly	1	See Fig.2	1-10	Internal hexagon screw M10 × 45	2	
1-2	Handle assembly	1	See Fig.3	1-11	Half round head hexagon socket screw M10 × 30	2	
1-3	Box cover shell	1		1-12	Internal hexagon screw M8 × 25	2	
1-4	Circular electricity meter 12V	1		1-13	Oil cylinder assembly	1	See Fig.5
1-5	Nylon screw M6 × 30	4		1-14	Inner door pillar assembly	1	See Fig.6
1-6	Active door seat assembly	1	See Fig.4	1-15	Charger 12V6A	1	
1-7	Fork welding components	1		1-16	Key	1	
1-8	Flat pad Φ10	2		1-17	Key switch holder JK410	1	
1-9	Elastic pad Φ10	4					

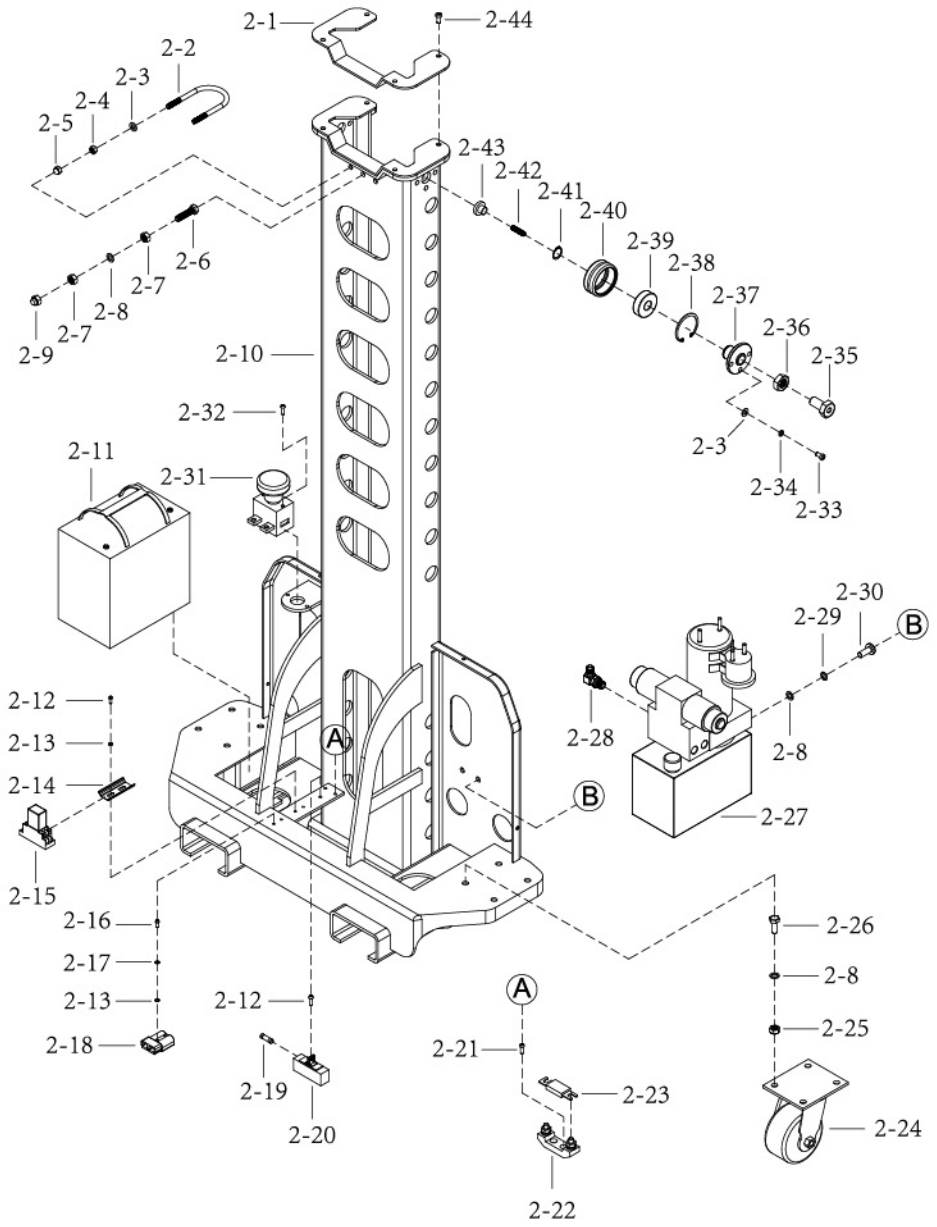

Note: A and B in the figure are the corresponding installation positions

Fig.2 Frame assembly

Fig.2 Frame assembly

No.	Part name	Qty	Remarks
2-1	Cover plate on the outer door pillar	1	
2-2	U-shaped bolt	1	
2-3	Flat pad Φ 8	8	
2-4	Nut M8	2	
2-5	Cover nut M8	2	
2-6	Hexagonal bolt M10 × 40	1	
2-7	Nut M10	2	
2-8	Flat pad Φ 10	11	
2-9	Cap nut M10	1	
2-10	Frame	1	
2-11	Battery 33Ah/12V	1	
2-12	Half round head cross screw M4 × 10	3	
2-13	Flat pad Φ 4	4	
2-14	track	1	
2-15	Relay DC12V	2	
2-16	Half round head cross screw M4 × 25	2	
2-17	Elastic pad Φ4	2	
2-18	Connector 50A	1	
2-19	Fuse 4A	1	
2-20	Fuse base	1	
2-21	Half round head cross screw M5 × 10	2	
2-22	DC melting seat	1	
2-23	DC melting plate 200A	1	
2-24	Universal casters	2	7014-66
2-25	Anti loosening nut M10	8	
2-26	Hexagonal bolt M10 × 30	8	
2-27	Power unit assembly	1	See Fig.7
2-28	Oil pipe right angle joint	2	M14×1.5 - G1/4
2-29	Elastic pad Φ10	2	
2-30	Half round head hexagon socket screw M10 × 25	2	
2-31	Emergency stop switch 125A	1	
2-32	Half round head cross screw M5 × 15	2	
2-33	Half round head hexagon socket screw M8 × 15	6	
2-34	Elastic pad Φ8	6	
2-35	Fixed bolt	2	
2-36	Thin hexagonal nut M16 × 1.5	2	
2-37	Outer door pillar shaft head	2	
2-38	Drill ring Φ 52	2	
2-39	Bearing 6205	2	
2-40	Roller	2	
2-41	Shaft retaining ring Φ 25	2	
2-42	Hexagonal flat end set screw M8 × 20	4	
2-43	Nylon adjustment pad	2	
2-44	Half round head hexagon socket screw M8 × 10	4	

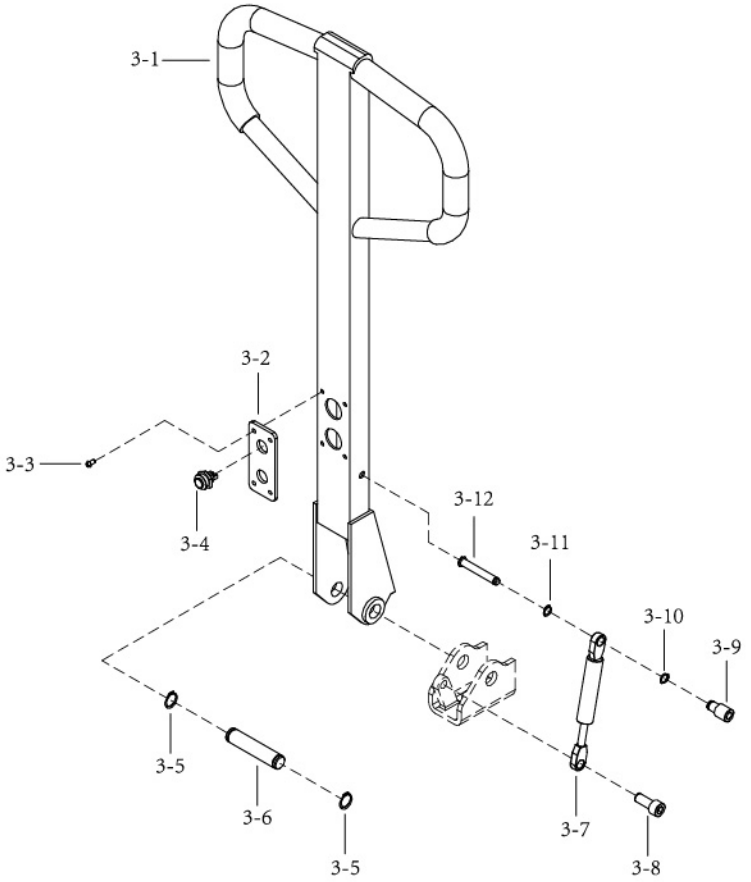

Fig.3 Handle assembly

No.	Part Name	Qty
3-1	Glue coated handle	1
3-2	Handle switch mounting plate	1
3-3	Half round head cross screw M4×10	4
3-4	Stainless steel button Φ16	2
3-5	Shaft ring Φ16	2
3-6	Handle pin shaft	1
3-7	Gas spring Φ10×152/400N	1
3-8	Hexagonal socket screw M8×15	1
3-9	Gas spring upper support sleeve	1
3-10	Shaft ring Φ10	1
3-11	Shaft ring Φ8	1
3-12	Gas spring upper support shaft	1

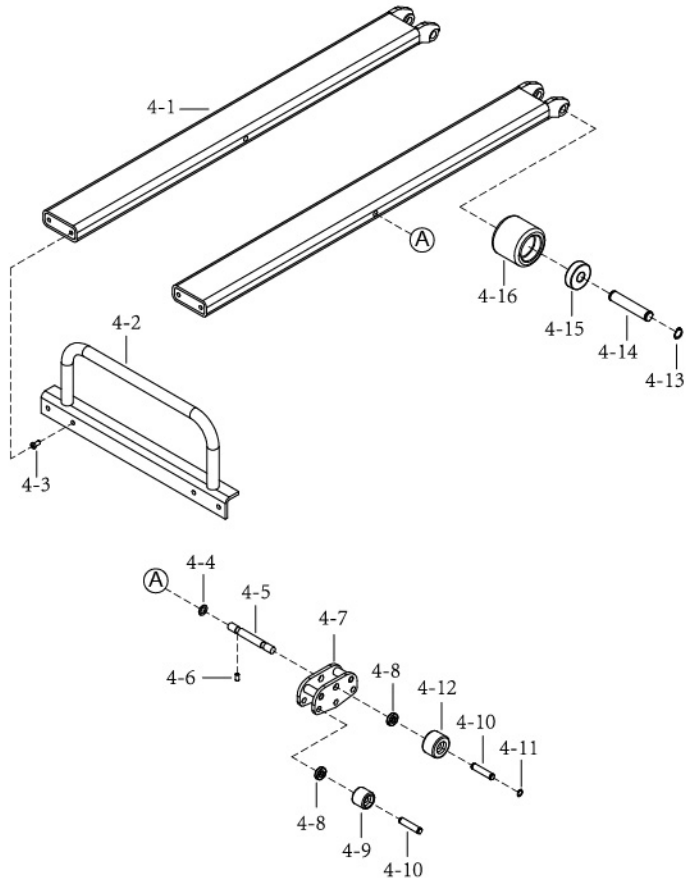

Note: A in the figure is the corresponding installation position

Fig.4 Activity door seat assembly

No.	Part name	Qty	No.	Part name	Qty
4-1	Movable door seat	2	4-9	Φ30 guide wheel	4
4-2	Handrail	1	4-10	Guide axle	6
4-3	Hexagon socket head screw M8×20	4	4-11	Retaining ring for shaft Φ10	12
4-4	Flat pad 12	2	4-12	Φ40 guide wheel	2
4-5	Guide wheel frame shaft	2	4-13	Retaining ring for shaft Φ17	4
4-6	Hexagon set screw M6×8	4	4-14	Front axle	2
4-7	Guide wheel frame	2	4-15	Bearing 6303	4
4-8	Bearing 61900	12	4-16	Front wheel Φ70×60	2

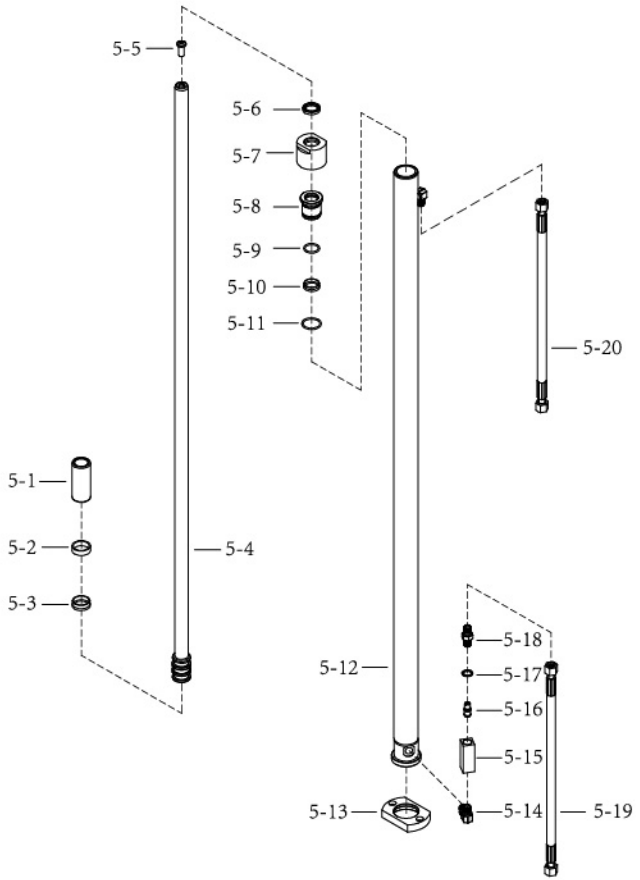

Fig.5 Cylinder assembly

No.	Part name	Qty	Remarks	No.	Part name	Qty	Remarks
5-1	Top cover	1		5-12	Lifting cylinder	1	0511 / 0513
5-2	Wear resistant belt D35×d30×10	1		5-13	Fixed seat	1	
5-3	Y-ring D35×d27×10	2		5-14	Oil pipe right angle joint	1	M14×1.5
5-4	Lifting lever	1		5-15	Mounting base of pressure compensation valve	1	
5-5	Hexagon socket head screw M10×25	1	0511 / 0513				
5-6	Dust ring d33×D25×4.5/6	1		5-16	Pressure compensation valve	1	
5-7	Cylinder nut	1		5-17	Combined washer Φ 14	1	
5-8	Seal sleeve	1		5-18	Straight joint of oil pipe	1	M14×1.5
5-9	O-ring D25×2.65	1		5-19	Oil pipe (90 ° bend / straight)	1	M14×1.5 / 500
5-10	Y-ring d31×D25×8	1		5-20	Oil pipe (90 ° bend / straight)	1	M14×1.5 / 1280
5-11	O-ring d31.5×2.65	2		5-20	Oil pipe (90 ° bend / straight)	1	M14×1.5 / 1480

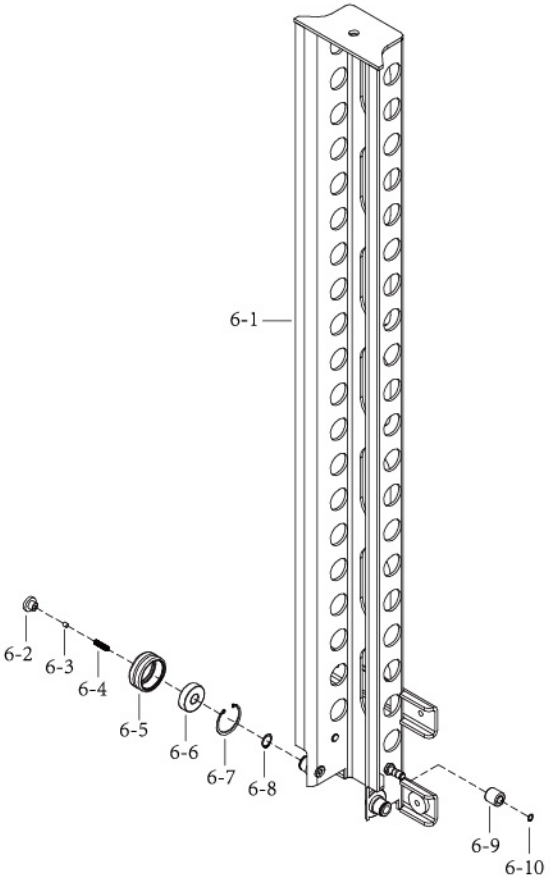

Fig.6 Inner door post assembly

No.	Part name	Qty
6-1	Inner door post	1
6-2	Nylon adjusting pad	2
6-3	Adjusting pad mandrel	2
6-4	Hexagon socket flat set screw M8×20	4
6-5	Roller	2
6-6	Bearing 6205	2
6-7	Retaining ring for hole Φ52	2
6-8	Retaining ring for shaft Φ25	2
6-9	Auxiliary roller	2
6-10	Retaining ring for shaft Φ12	2